ELEVATION SERIES DISCOVER SE AND DISCOVER SI 95X CROSS-TRAINER BASE

(95X-ALLXX-06, 95XS-XXXXX-XX07, 95XS-XXXXX-0115, PCSXS-XXXXX-XX07, PCSXS-XXXXX-0115)

10.26.15

PARTS MANUAL



LifeFitness

WHAT WE LIVE FOR

Table of Contents

Miscellaneous Part Numbers **1**

Console Assembly, Bullhorns, Handlebars, Bracket and Covers **2**

Drive System **4**

Frame System **6**

Clevis Covers, Side and Rear Shrouds 6

Deadshaft, Tower and Frame Covers 8

Mono-column and Stabilizers 10

Collar Covers and Deadshaft End Caps 12

Linkage System **13**

Pedal Levers 13

Rocker Cover and Links 14

Timing System **15**

Right Rear Rocker Assembly 15

Left Rear Rocker Assembly 16

Electrical **17**

Wiring Diagram 17

Cable List 18

Miscellaneous Part Numbers

Item	Alpha Code*	Part Number	Description
MISC-001	XAX, ASX, AXS	0017-00003-1072	24V Power Supply
	APX, ASW	0017-00003-1051	Power Supply 39 VAC, 1.66 AMP
MISC-002	XAX, ASX, AXS, ASW	0017-00003-0704	Line Cord Dom 10A, 125V
MISC-003	XAX, ASX	0017-00003-0691	Line Cord Cont 10A, 250V
MISC-004	XAX, ASX	0017-00003-0889	Line Cord U.K. 10A
MISC-005	XAX, ASX	0017-00003-0918	Line Cord Australia
MISC-006	XAX, ASX	0017-00003-1012	Line Cord China 10A, 250V
MISC-007	XAX, ASX, AXS	0K69-01255-2400	Power Brick Mounting Clip
MISC-008	XAX, ASX, AXS, APX, ASW	0017-00008-0204	Arctic Silver Touch Up Paint: Spray Can
MISC-009	XAX, ASX, AXS, APX, ASW	0017-00008-0205	Arctic Silver Touch Up Paint: .5 Oz Bottle W/ Applicator
MISC-010	ASX, AXS	0017-00008-0223	Pearl White BASE Touch Up Paint: Spray Can
MISC-011	ASX, AXS	0017-00008-0225	Pearl White BASE Touch Up Paint: .5 Oz Bottle W/ Applicator
MISC-012	ASX, AXS	0017-00008-0224	Pearl White TOP COAT Touch Up Paint: Spray Can
MISC-013	ASX, AXS	0017-00008-0226	Pearl White TOP COAT Touch Up Paint: .5 Oz Bottle W/ Applicator
MISC-014	ASX, AXS	0017-00008-0227	Titanium Touch Up Paint: Spray Can
MISC-015	ASX, AXS	0017-00008-0228	Titanium Touch Up Paint: .5 Oz Bottle W/ Applicator
MISC-016	ASX, AXS	0017-00008-0229	Metallic Black Touch Up Paint: Spray Can
MISC-017	ASX, AXS	0017-00008-0230	Metallic Black Touch Up Paint: .5 Oz Bottle W/ Applicator
MISC-018	ASX, AXS, APX, ASW	0017-00008-0231	Charcoal Gray Touch Up Paint: Spray Can
MISC-019	ASX, AXS, APX, ASW	0017-00008-0232	Charcoal Gray Touch Up Paint: .5 Oz Bottle W/ Applicator

* Refer to first three letters of the product's Serial Number for the Alpha code

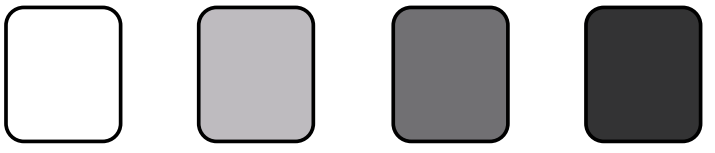

Console Assembly, Bullhorns, Handlebars, Bracket and Covers

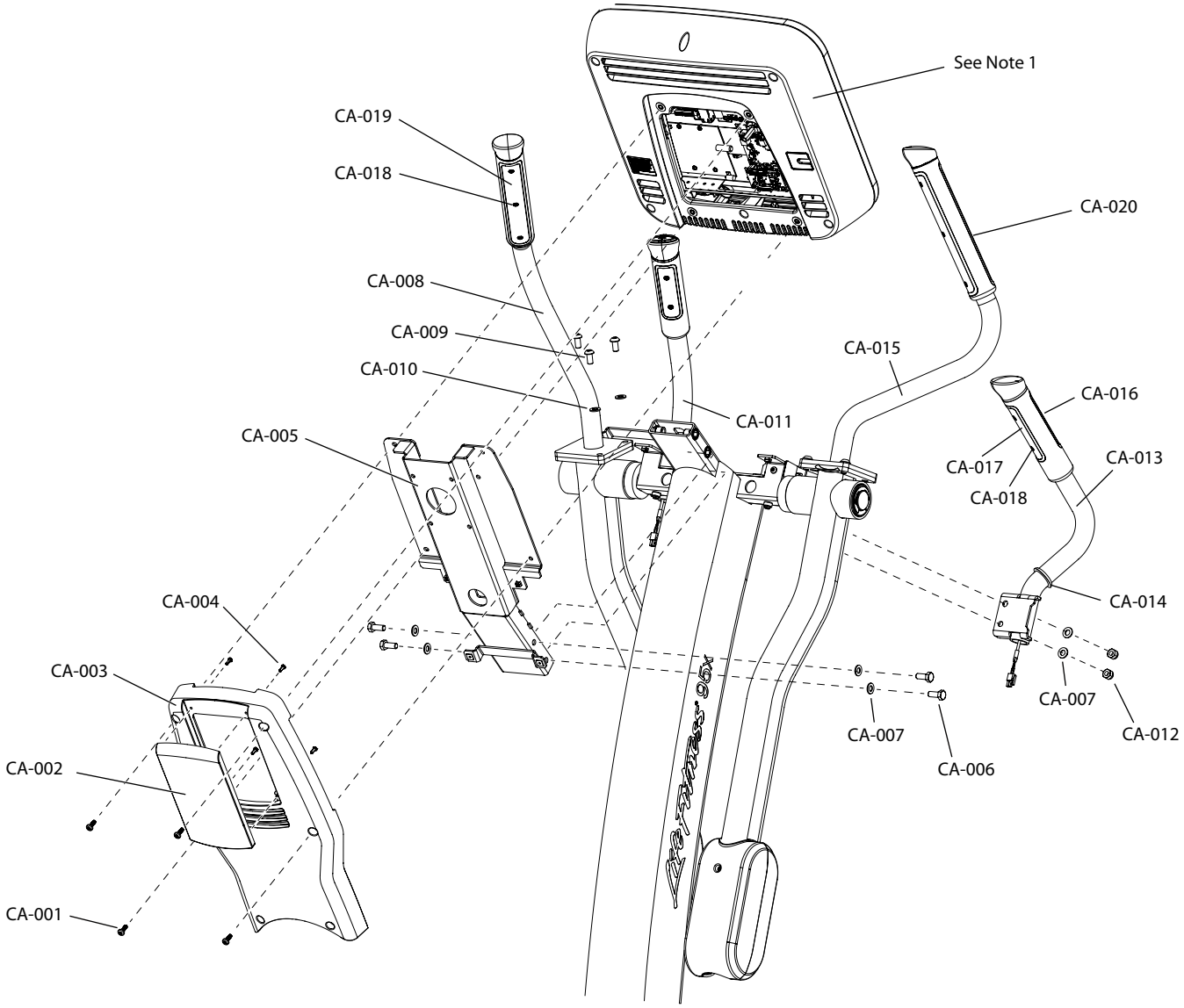

Note 1: For Console Parts information refer to the Parts Manual of the installed console.

Refer to following page for Parts List.

Parts List

Item	Alpha Code	Part Number	Description
CA-001	XAX, ASX, AXS, APX, ASW	0017-00101-1972	M5 X .8 - 6g6g X 14 DIN PHL PAN MS ST ZB
CA-002	XAX	AK92-00058-0000	ASSEMBLY: COVER; REMOVABLE DOOR; APOLLO 2: SHADOW GRAY
	ASX, AXS	AK92-00058-2400	ASSEMBLY: COVER; REMOVABLE DOOR; APOLLO 2: CHARCOAL GRAY
CA-003	XAX	0K69-01122-0000	COVER: CONSOLE; BACK: SHADOW GRAY
	ASX, AXS, APX, ASW	0K69-01122-2400	COVER: CONSOLE; BACK: CHARCOAL GRAY
CA-004	XAX, ASX, AXS, APX, ASW	0017-00101-1650	VMI 6-19X 6 PHL PAN PLT ST BZ B
CA-005	XAX, ASX, AXS, APX, ASW	AK69-00081-0000	ASSY: CONSOLE; MTG
CA-006	XAX, ASX, AXS, APX, ASW	0017-00101-1906	VMI M8 X1.25-6G6GX20 DIN UNS HEX CS ST ZN
CA-007	XAX, ASX, AXS, APX, ASW	0017-00104-0469	VMI WSH:M 8.40X 16.00X 1.60 DIN D FLAT ST ZB B
CA-008	XAX	AK69-00087-0000	HANDLEBAR-ASSY: CT; RT; MFG: SHADOW GRAY
	ASX, AXS, APX, ASW	AK69-00087-2400	HANDLEBAR-ASSY: CT; RT; MFG: CHARCOAL GRAY
CA-009	XAX, ASX, AXS, APX, ASW	0017-00101-2007	M8 X 1.25-6G6G X 16 DIN HEX BUT L CS CT
CA-010	XAX, ASX, AXS, APX, ASW	0017-00104-0469	VMI WSH:M 8.40X 16.00X 1.60 DIN D FLAT ST ZB B
CA-011	XAX	AK69-00068-0000	BULLHORN: ASSY RT: SHADOW GRAY
	ASX, AXS, APX, ASW	AK69-00068-2400	BULLHORN: ASSY RT: CHARCOAL GRAY
CA-012	XAX, ASX, AXS, APX, ASW	0017-00103-0333	VMI NUT M 8X1.25-6H6H DIN L LOCKNUT ST ZN B
CA-013	XAX	AK69-00062-0000	BULLHORN: ASSY LT: SHADOW GRAY
	ASX, AXS, APX, ASW	AK69-00062-2400	BULLHORN: ASSY LT: CHARCOAL GRAY
CA-014	XAX	0K62-01199-0002	GASKET: BULLHORN; SHADOW GRAY
	ASX, AXS, APX, ASW	0K62-01199-0703	GASKET: BULLHORN; CHARCOAL GRAY
CA-015	XAX	AK69-00085-0000	HANDLEBAR-ASSY: CT; LT; MFG: SHADOW GRAY
	ASX, AXS, APX, ASW	AK69-00085-2400	HANDLEBAR-ASSY: CT; LT; MFG: CHARCOAL GRAY
CA-016	XAX	AK69-00139-0003	ELECTRODE: INSERT-MOLDED ASSY; 4 INCH; TOP: SHADOW GRAY
	ASX, AXS, APX, ASW	AK69-00139-2404	ELECTRODE: INSERT-MOLDED ASSY; 4 INCH; TOP: CHARCOAL GRAY
CA-017	XAX	AK69-00140-0003	ELECTRODE: INSERT-MOLDED ASSY; 4 INCH; BOTTOM: SHADOW GRAY
	ASX, AXS, APX, ASW	AK69-00140-2404	ELECTRODE: INSERT-MOLDED ASSY; 4 INCH; BOTTOM: CHARCOAL GRAY
CA-018	XAX, ASX, AXS, APX, ASW	0017-00101-2054	SCR: 6-19X16 PHL PAN HLS ST ZN PLASTITE
CA-019	XAX	AK69-00102-0000	ELECTRODE: INSERT; MOLDED; BOTTOM: SHADOW GRAY
	ASX, AXS, APX, ASW	AK69-00102-2401	ELECTRODE: INSERT; MOLDED; BOTTOM: CHARCOAL GRAY
CA-020	XAX	AK69-00101-0000	ELECTRODE: INSERT; MOLDED; TOP: SHADOW GRAY
	ASX, AXS, APX, ASW	AK69-00101-2401	ELECTRODE: INSERT; MOLDED; TOP: CHARCOAL GRAY

Drive System

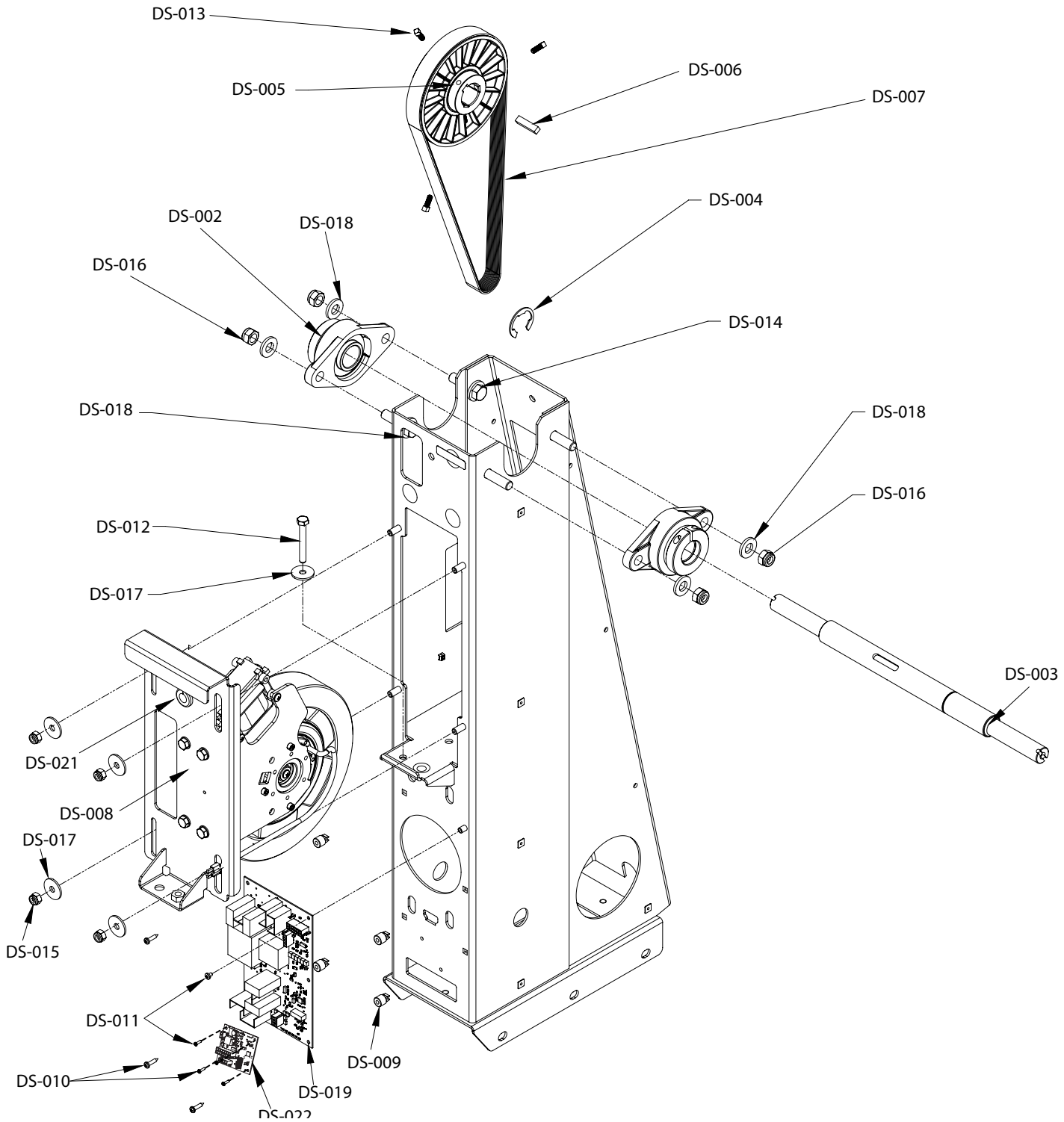

Parts List

Item	Alpha Code	Part Number	Description
DS-002	XAX, ASX, AXS, APX, ASW	0K69-01250-0000	BRG: 360 DEGREE LOCKING FLANGE
DS-003	XAX, ASX, AXS, APX, ASW	0K69-01030-0000	SHAFT: MAIN
DS-004	XAX, ASX, AXS, APX, ASW	0017-00100-0148	RNG: E 1.188 5133-118 ST PP B
DS-005	XAX, ASX, AXS, APX, ASW	0K69-01020-0000	PULLEY, POLY-V; 6.03 P.D., METRIC THREADS
DS-006	XAX, ASX, AXS, APX, ASW	0K69-01021-0000	MACHINE KEY 8MM X 7MM X 34MM
DS-007	XAX, ASX, AXS, APX, ASW	0K69-01256-0000	BELT: POLY-VEE; ARAMID CORD; 10 RIB
DS-008	XAX, ASX, AXS, APX, ASW	AK69-00075-0000	GENERATOR MTG ASSY
DS-009	XAX, ASX, AXS, APX, ASW	0017-00042-1226	GROMMET: PLASTIC #8, .375H
DS-010	XAX, ASX, AXS, APX, ASW	0017-00101-1795	M4.2 X 0.7 6g6g X 19 DIN PHL PAN AB ST ZS
DS-011	XAX, ASX, AXS, APX, ASW	0017-00101-2107	M4 X .70-6G6G X 6 PHL PAN MS ST ZS
DS-012	XAX, ASX, AXS, APX, ASW	0017-00101-2002	M8.0X1.25-6G6GX60 DIN UNS HEX CS G5 CD
DS-013	XAX, ASX, AXS, APX, ASW	0017-00101-2015	M6 X 1.0-6G6G X15 DIN UNS SQR L CUP ST BO
DS-014	XAX, ASX, AXS, APX, ASW	0017-00101-1867	M12 X 1.75 6G6G X 45 DIN UNS HEX CS ST Z
DS-015	XAX, ASX, AXS, APX, ASW	0017-00103-0333	NUT: M8X1.25-6H6H DIN L LOCKNUT ST ZN
DS-016	XAX, ASX, AXS, APX, ASW	0017-00103-0332	NUT: M12X1.75-6H6H DIN L LOCKNUT ST ZN
DS-017	XAX, ASX, AXS, APX, ASW	0017-00104-0409	WSH 327-1125-090 FL-D ST BZ
DS-018	XAX, ASX, AXS, APX, ASW	0017-00104-0193	WSH 531-1.06-137 FL-D ST ZN
DS-019	XAX, ASX, AXS	A084-92389-0000	PROGRAMMED PCB: -06 GBC
	APX, ASW	AK66-00100-0006	PWR-PCB BRKT ASSY WITH SOFTWARE
DS-021	XAX, ASX, AXS, APX, ASW	0K62-01189-0000	GROMMET: SPLIT; ELASTOMER B

Frame System

Clevis Covers, Side and Rear Shrouds

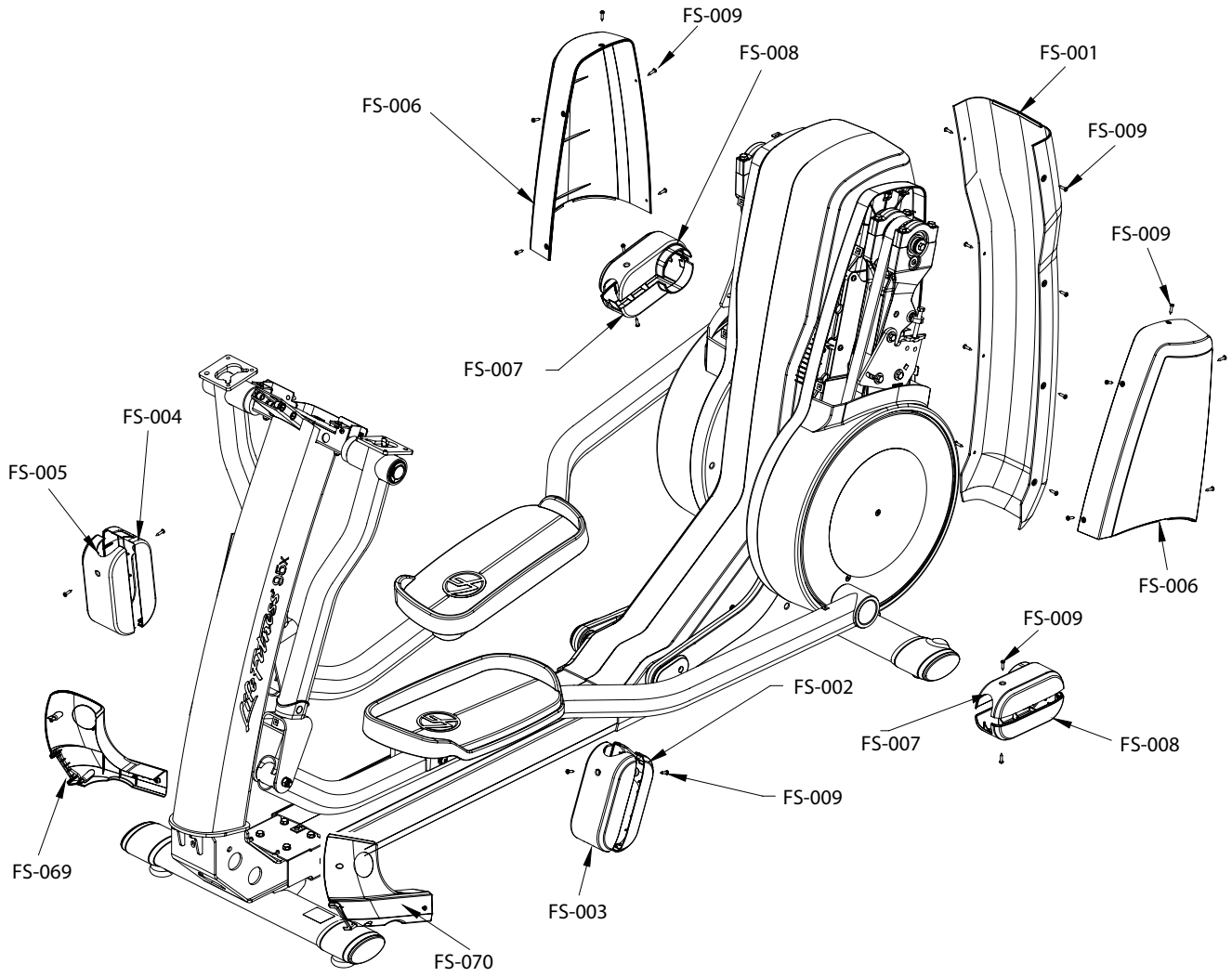

Refer to following page for Parts List.

Parts List

Item	Alpha Code	Part Number	Description
FS-001	XAX	AK69-00125-0000	SUB-ASSY: REAR ACCESS COVER & DECAL: SHADOW GRAY
	ASX, AXS, APX, ASW	AK69-00125-2400	SUB-ASSY: REAR ACCESS COVER & DECAL: CHARCOAL GRAY
FS-002	XAX	0K69-01114-0000	COVER: FRONT CLEVIS: LEFT: SHADOW GRAY
	ASX, AXS, APX, ASW	0K69-01114-2400	COVER: FRONT CLEVIS: LEFT: CHARCOAL GRAY
FS-003	XAX	0K69-01116-0000	COVER: OUTSIDE CLEVIS; LEFT: SHADOW GRAY
	ASX, AXS, APX, ASW	0K69-01116-2400	COVER: OUTSIDE CLEVIS; LEFT: CHARCOAL GRAY
FS-004	XAX	0K69-01115-0000	COVER: FRONT CLEVIS; RIGHT: SHADOW GRAY
	ASX, AXS, APX, ASW	0K69-01115-2400	COVER: FRONT CLEVIS; RIGHT: CHARCOAL GRAY
FS-005	XAX	0K69-01117-0000	COVER: OUTSIDE CLEVIS; RIGHT: SHADOW GRAY
	ASX, AXS, APX, ASW	0K69-01117-2400	COVER: OUTSIDE CLEVIS; RIGHT: CHARCOAL GRAY
FS-006	XAX	0K69-01108-0000	COVER: UPPER LINK: SHADOW GRAY
	ASX, AXS, APX, ASW	0K69-01108-2400	COVER: UPPER LINK: CHARCOAL GRAY
FS-007	XAX	0K69-01130-0000	COVER: REAR PEDAL LEVER 1: SHADOW GRAY
	ASX, AXS, APX, ASW	0K69-01130-2400	COVER: REAR PEDAL LEVER 1: CHARCOAL GRAY
FS-008	XAX	0K69-01131-0000	COVER: REAR PEDAL LEVER 2: SHADOW GRAY
	ASX, AXS, APX, ASW	0K69-01131-2400	COVER: REAR PEDAL LEVER 2: CHARCOAL GRAY
FS-009	XAX, ASX, AXS, APX, ASW	0017-00101-1796	M4.2 X 0.7 6g6g X 19 DIN PHL PAN AB ST ZB
FS-069	XAX	AK69-00124-0000	COVER: FRONT ELBOW; RIGHT: LF DECAL: SHADOW GRAY
	ASX, ASW	AK69-00124-2400	COVER: FRONT ELBOW; RIGHT: LF DECAL: CHARCOAL GRAY
	AXS, APX	AK69-00124-2403	COVER: FRONT ELBOW; RIGHT: PC DECAL: CHARCOAL GRAY
FS-070	XAX	AK69-00124-0001	COVER: FRONT ELBOW; LEFT: LF DECAL: SHADOW GRAY
	ASX, ASW	AK69-00124-2401	COVER: FRONT ELBOW; LEFT: LF DECAL: CHARCOAL GRAY
	AXS, APX	AK69-00124-2402	COVER: FRONT ELBOW; LEFT: PC DECAL: CHARCOAL GRAY

Deadshaft, Tower and Frame Covers

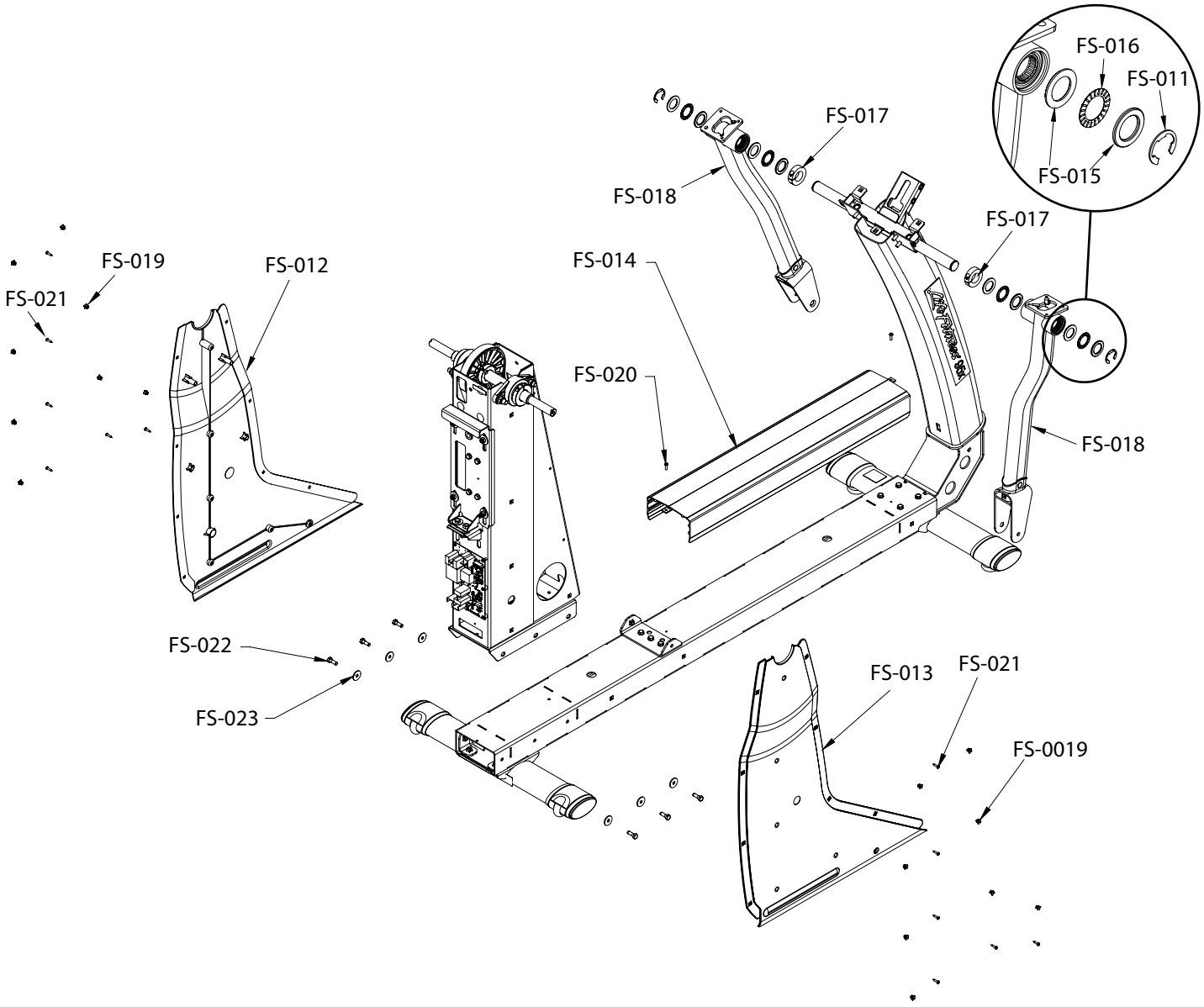

Refer to following page for Parts List.

Parts List

Item	Alpha Code	Part Number	Description
FS-011	XAX, ASX, AXS, APX, ASW	0017-00100-0148	RNG: E 1.188 5133-118 ST PP B
FS-012	XAX	0K69-01135-0000	COVER: TOWER, LEFT: SHADOW GRAY
	ASX, AXS, APX, ASW	0K69-01135-2400	COVER: TOWER, LEFT: CHARCOAL GRAY
FS-013	XAX	0K69-01136-0000	COVER: TOWER, RIGHT: SHADOW GRAY
	ASX, AXS, APX, ASW	0K69-01136-2400	COVER: TOWER, RIGHT: CHARCOAL GRAY
FS-014	XAX, ASX, AXS, APX, ASW	0K69-01132-0000	COVER: MAIN FRAME; PURCHASE: ARCTIC SILVER
	ASX, AXS	0K69-01132-2100	COVER: MAIN FRAME; PURCHASE: PEARL WHITE
	ASX, AXS	0K69-01132-2200	COVER: MAIN FRAME; PURCHASE: TITANIUM
	ASX, AXS	0K69-01132-2300	COVER: MAIN FRAME; PURCHASE: METALLIC BLACK
FS-015	XAX, ASX, AXS, APX, ASW	0K69-01074-0000	WSH: THRUST;30MM ID X 47MM OD X 3MM
FS-016	XAX, ASX, AXS, APX, ASW	0017-00006-0294	BRG: THR; 30MM X 47MM X 2MM
FS-017	XAX, ASX, AXS, APX, ASW	0K69-01018-0000	SHAFT COLLAR, 30MM ID
FS-018	XAX	AK69-00045-0000	ASSY: ROCKER ARM W/ BEARING; PURCH: SHADOW GRAY
	ASX, AXS, APX, ASW	AK69-00045-2600	ASSY: ROCKER ARM W/ BEARING; PURCH: CHARCOAL GRAY
FS-019	XAX, ASX, AXS, APX, ASW	0017-00042-1147	GROMMET: SCREW; 8 OR 10
FS-020	XAX, ASX, AXS, APX, ASW	0017-00101-1986	M5 X 0.8 6G6G X 16 DIN PAN TT ST ZN
FS-021	XAX, ASX, AXS, APX, ASW	0017-00101-1796	M4.2 X 0.7 6g6g X 19 DIN PHL PAN AB ST ZB
FS-022	XAX, ASX, AXS, APX, ASW	0017-00101-1931	M8X1.25 6G6GX25MM DIN UNS HEX CS ST ZN
FS-023	XAX, ASX, AXS, APX, ASW	0017-00104-0409	WSH 327-1125-090 FL-D ST BZ

Monocolumn and Stabilizers

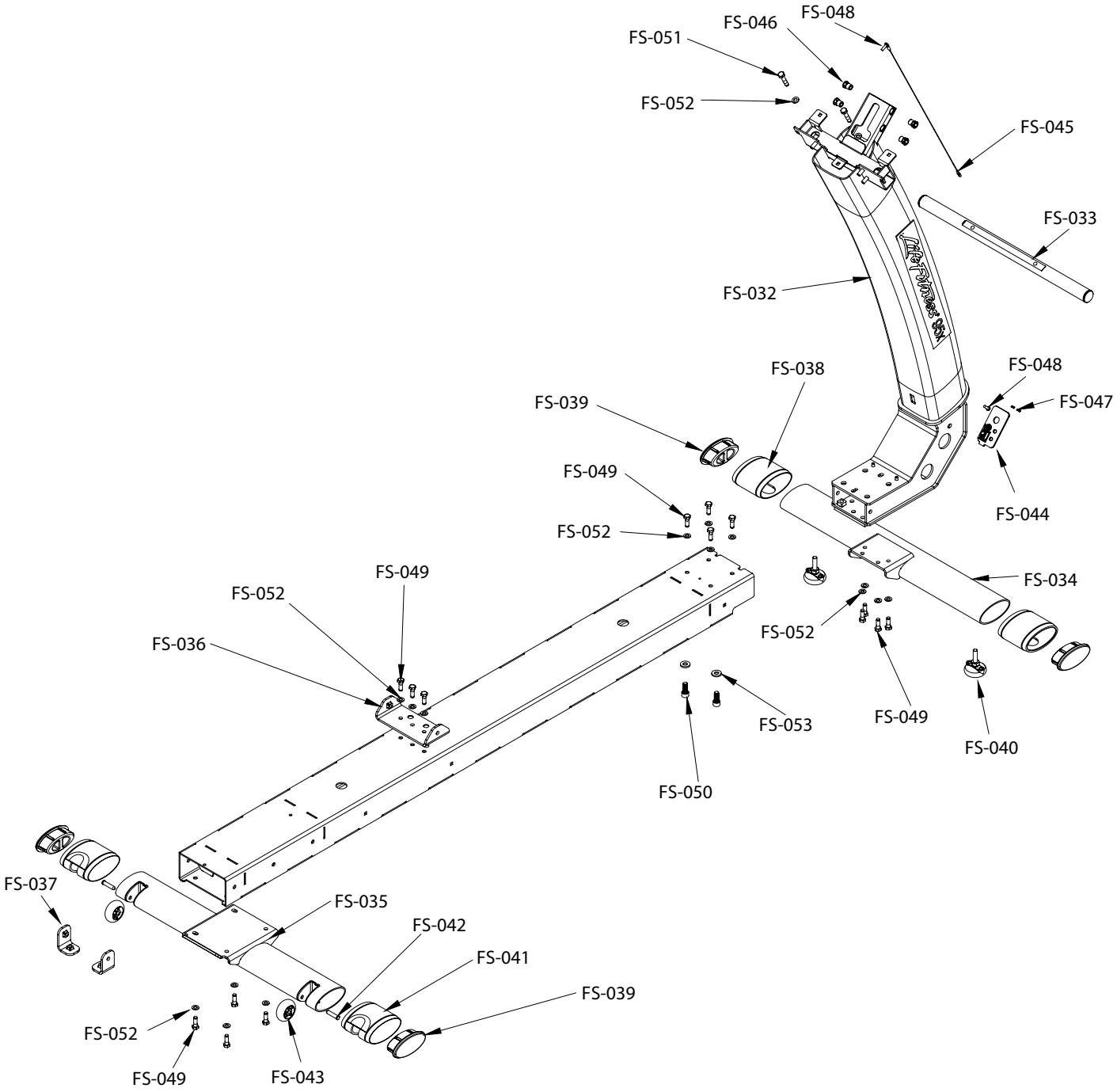

Refer to following page for Parts List

Parts List

Item	Alpha Code	Part Number	Description
FS-032	XAX, ASX, AXS, APX, ASW	AK69-00122-0101	ASSY, MANUF: MONOCOLUMN WITH DECAL: ARCTIC SILVER
	ASX, AXS	AK69-00122-2101	ASSY, MANUF: MONOCOLUMN WITH DECAL: PEARL WHITE
	ASX, AXS	AK69-00122-2200	ASSY, MANUF: MONOCOLUMN WITH DECAL: TITANIUM
	ASX, AXS	AK69-00122-2300	ASSY, MANUF: MONOCOLUMN WITH DECAL: METALLIC BLACK
FS-033	XAX, ASX, AXS, APX, ASW	0K69-01062-0000	SHAFT: DEAD; PURCH.
FS-034	XAX	AK69-00118-0000	ASSY: STABILIZER; PAINTED; FRONT: SHADOW GRAY
	ASX, AXS, APX, ASW	AK69-00118-2400	ASSY: STABILIZER; PAINTED; FRONT: CHARCOAL GRAY
FS-035	XAX	AK69-00090-0000	STABLIZER-ASSY: REAR; PAINTED: SHADOW GRAY
	ASX, AXS, APX, ASW	AK69-00090-2400	STABILIZER-ASSY:REAR;PAINTED: CHARCOAL GRAY
FS-036	XAX, ASX, AXS, APX, ASW	AK69-00170-0000	BRACKET; ROCKING LINK W/WELDNUTS
FS-037	XAX, ASX, AXS, APX, ASW	AK69-00169-0000	WELDMENT: FRAME STIFFENER
FS-038	XAX	0K69-01139-0000	SHROUD: FRONT STABILIZER: SHADOW GRAY
	ASX, AXS, APX, ASW	0K69-01139-0700	SHROUD: FRONT STABILIZER: BLACK
FS-039	XAX	0K66-01042-0000	END CAP: FRONT STABILIZER: SHADOW GRAY
	ASX, AXS, APX, ASW	0K66-01042-0700	END CAP: FRONT STABILIZER: BLACK
FS-040	XAX, ASX, AXS, APX, ASW	0K68-01047-0000	LEVELER W/NUT ASS'Y;
FS-041	XAX	0K66-01041-0000	SHROUD: REAR STABILIZER: SHADOW GRAY
	ASX, AXS, APX, ASW	0K66-01041-0700	SHROUD: REAR STABILIZER: BLACK
FS-042	XAX, ASX, AXS, APX, ASW	0K66-01040-0000	SHAFT: BIKE WHEEL
FS-043	XAX, ASX, AXS, APX, ASW	0K66-01039-0000	WHEEL: BIKE
FS-044	XAX	AK66-00161-0000	BRKT ASSY: POWER/COAX INPUT: SHADOW GRAY
	ASX, AXS, APX, ASW	AK66-00161-2400	BRKT ASSY: POWER/COAX INPUT: CHARCOAL GRAY
FS-045	XAX, ASX, AXS, APX, ASW	AK65-00103-0001	CABLE ASSY: GROUND ESD
FS-046	XAX, ASX, AXS, APX, ASW	0017-00009-1191	INSERT: METRIC; M8, HALF-HEX SHANK
FS-047	XAX, ASX, AXS, APX, ASW	0017-00101-2106	M2.5 X 1.06 X 10MM PHL PAN PLT ST ZS
FS-048	XAX, ASX, AXS, APX, ASW	0017-00101-1986	M5 X 0.8 6G6G X 16 DIN PAN TT ST ZN
FS-049	XAX, ASX, AXS, APX, ASW	0017-00101-1931	M8X1.25 6G6GX25MM DIN UNS HEX CS ST ZN
FS-050	XAX, ASX, AXS, APX, ASW	0017-00101-1966	M10-1.5 6G6G X 25 HEX SOC CAP ST ZS
FS-051	XAX, ASX, AXS, APX, ASW	0017-00101-1925	M8X1.25-6G6GX40.0 DIN UNS HEX MS ST ZN
FS-052	XAX, ASX, AXS, APX, ASW	0017-00104-0469	WASHER: M8.4X16.0X1.6 DIN D FLAT ST ZB
FS-053	XAX, ASX, AXS, APX, ASW	0017-00104-0263	WSH 406-.875-125 FL-D ST BZ

Collar Covers and Deadshaft End Caps

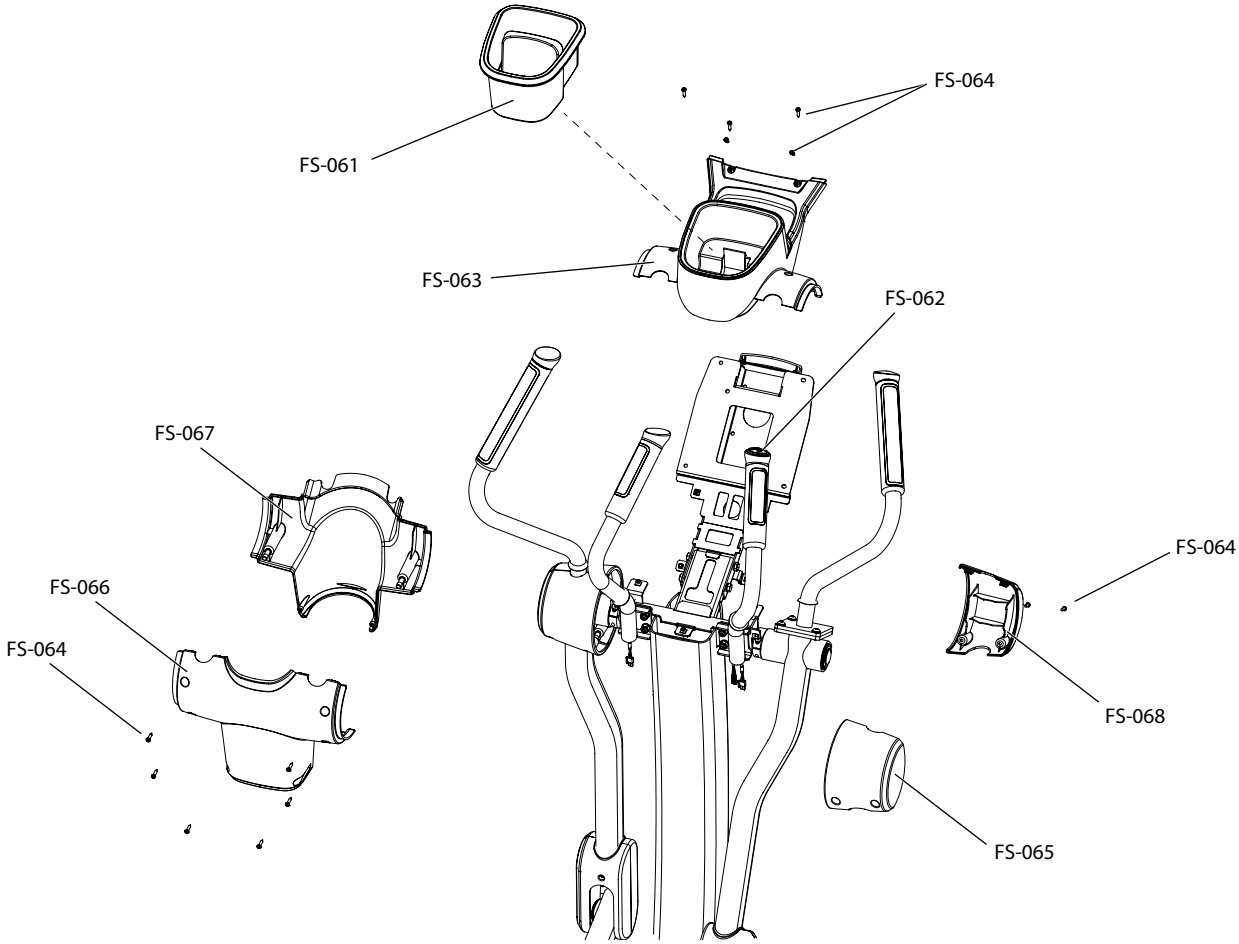

Parts List

Item	Alpha Code	Part Number	Description
FS-061	XAX	0K69-01125-0003	COVER: DEADSHAFT; MEDIA TRAY: ARCTIC SILVER
	ASX, AXS, APX, ASW	0K69-01125-2404	COVER: DEADSHAFT; MEDIA TRAY: CHARCOAL GRAY
FS-062	XAX	AK69-00100-0000	ASSY: BUTTON: SHADOW GRAY
	ASX, AXS, APX, ASW	AK69-00100-0700	ASSY: BUTTON: BLACK
FS-063	XAX	0K69-01124-0000	COVER: DEADSHAFT; TOP: SHADOW GRAY
	ASX, AXS, APX, ASW	0K69-01124-2400	COVER: DEADSHAFT; TOP: CHARCOAL GRAY
FS-064	XAX, ASX, AXS, APX, ASW	0017-00101-1796	VMI M4.2X0.7-6g6gX 19 DIN PHL PAN AB ST ZB B
FS-065	XAX	0K69-01127-0000	COVER: DEADSHAFT; END CAP, CAP 1: SHADOW GRAY
	ASX, AXS, APX, ASW	0K69-01127-2400	COVER: DEADSHAFT; END CAP, CAP 1: CHARCOAL GRAY
FS-066	XAX	0K69-01123-0000	COVER: DEADSHAFT; FRONT COLLAR: SHADOW GRAY
	ASX, AXS, APX, ASW	0K69-01123-2400	COVER: DEADSHAFT; FRONT COLLAR: CHARCOAL GRAY
FS-067	XAX	0K69-01121-0000	COVER: DEADSHAFT; REAR COLLAR: SHADOW GRAY
	ASX, AXS, APX, ASW	0K69-01121-2400	COVER: DEADSHAFT; REAR COLLAR: CHARCOAL GRAY
FS-068	XAX	0K69-01128-0000	COVER: DEADSHAFT; END CAP 2: SHADOW GRAY
	ASX, AXS, APX, ASW	0K69-01128-2400	COVER: DEADSHAFT; END CAP 2: CHARCOAL GRAY

Linkage System

Pedal Levers

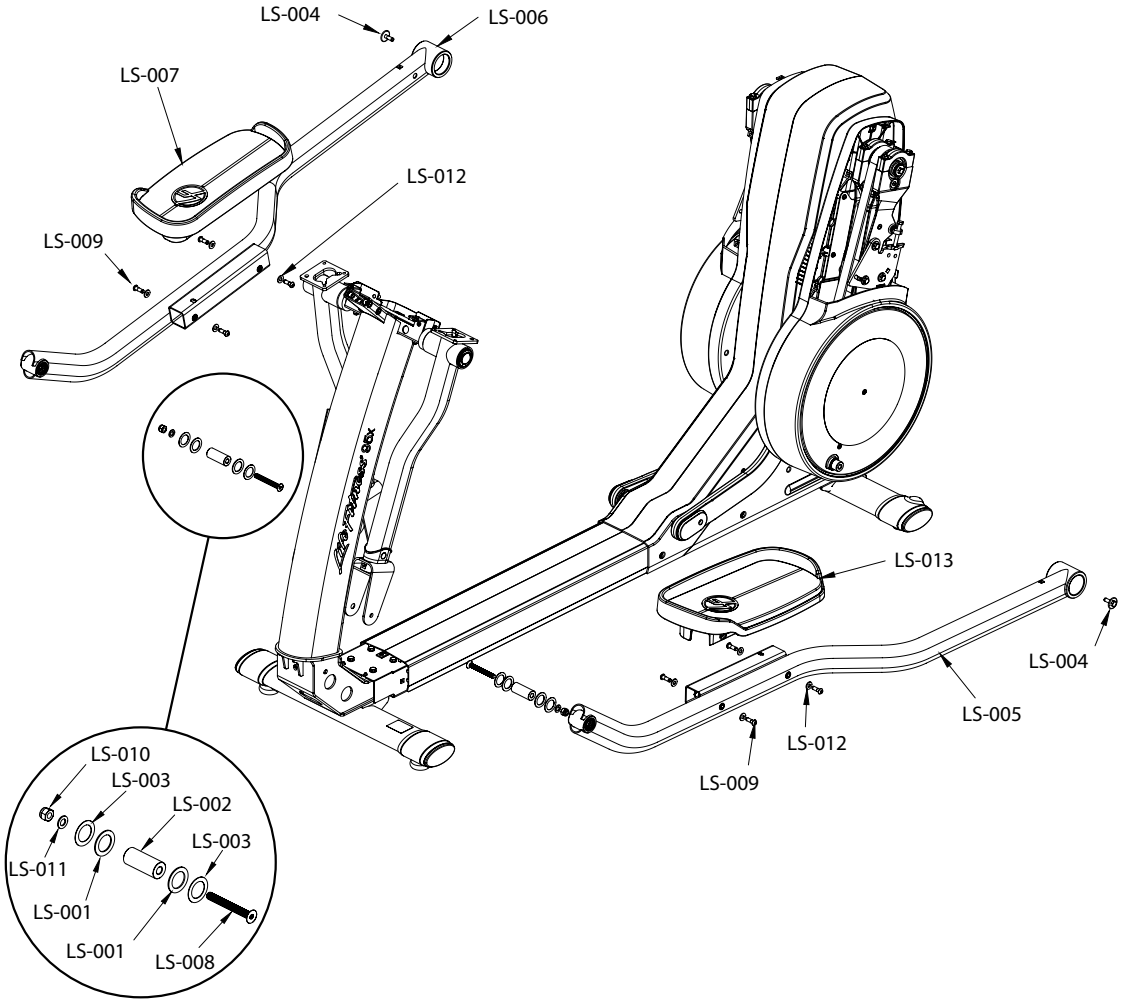

Parts List

Item	Alpha Code	Part Number	Description
LS-001	XAX, ASX, AXS, APX,ASW	0K47-01104-0000	BEARING: THRUST
LS-002	XAX, ASX, AXS, APX,ASW	0K69-01075-0000	SHAFT: ROCKER; FRONT; PURCH.
LS-003	XAX, ASX, AXS, APX,ASW	0K69-01190-0000	WASHER: THRUST; STEEL
LS-004	XAX, ASX, AXS, APX,ASW	0K69-01231-0000	SCREW: CRANK; SPECIAL; PURCH
LS-005	XAX	AK69-00037-0000	PEDAL LEVER ASSY: LEFT W/ BEARINGS: MFG.: SHADOW GRAY
	ASX, AXS, APX ,ASW	AK69-00037-2600	PEDAL LEVER ASSY: LEFT W/ BEARINGS: MFG: CHARCOAL GRAY
LS-006	XAX	AK69-00038-0000	PEDAL LEVER ASSY: RIGHT W/ BEARINGS; PURCH: SHADOW GRAY
	ASX, AXS, APX, ASW	AK69-00038-2600	PEDAL LEVER ASSY: RIGHT W/ BEARINGS: PURCH: CHARCOAL GRAY
LS-007	XAX	0K69-01100-0000	PEDAL: RIGHT; PURCH: SHADOW GRAY
	ASX, AXS, APX, ASW	0K69-01100-0700	PEDAL: RIGHT; PURCH: BLACK
LS-008	XAX, ASX, AXS, APX,ASW	0017-00101-1955	M10X1.50-6G6GX85MM DIN HXS FLT CS G5 ZN
LS-009	XAX, ASX, AXS, APX,ASW	0017-00101-1929	M8 X 1.25 6G6G X 25 DIN HEX BUT L CS ST
LS-010	XAX, ASX, AXS, APX,ASW	0017-00103-0334	NUT: M10X1.50-6H6H DIN L LOCKNUT ST ZB
LS-011	XAX, ASX, AXS, APX,ASW	0017-00104-0190	WSH 406-.734-064 FL-D ST BZ
LS-012	XAX, ASX, AXS, APX,ASW	0017-00104-0510	WASHER: M8.4X19.0X1.6 DIN FLAT ST ZB
LS-013	XAX	0K69-01099-0000	PEDAL: LEFT; PURCH: SHADOW GRAY
	ASX, AXS, APX, ASW	0K69-01099-0700	PEDAL: LEFT; PURCH: BLACK

Rocker Cover and Links

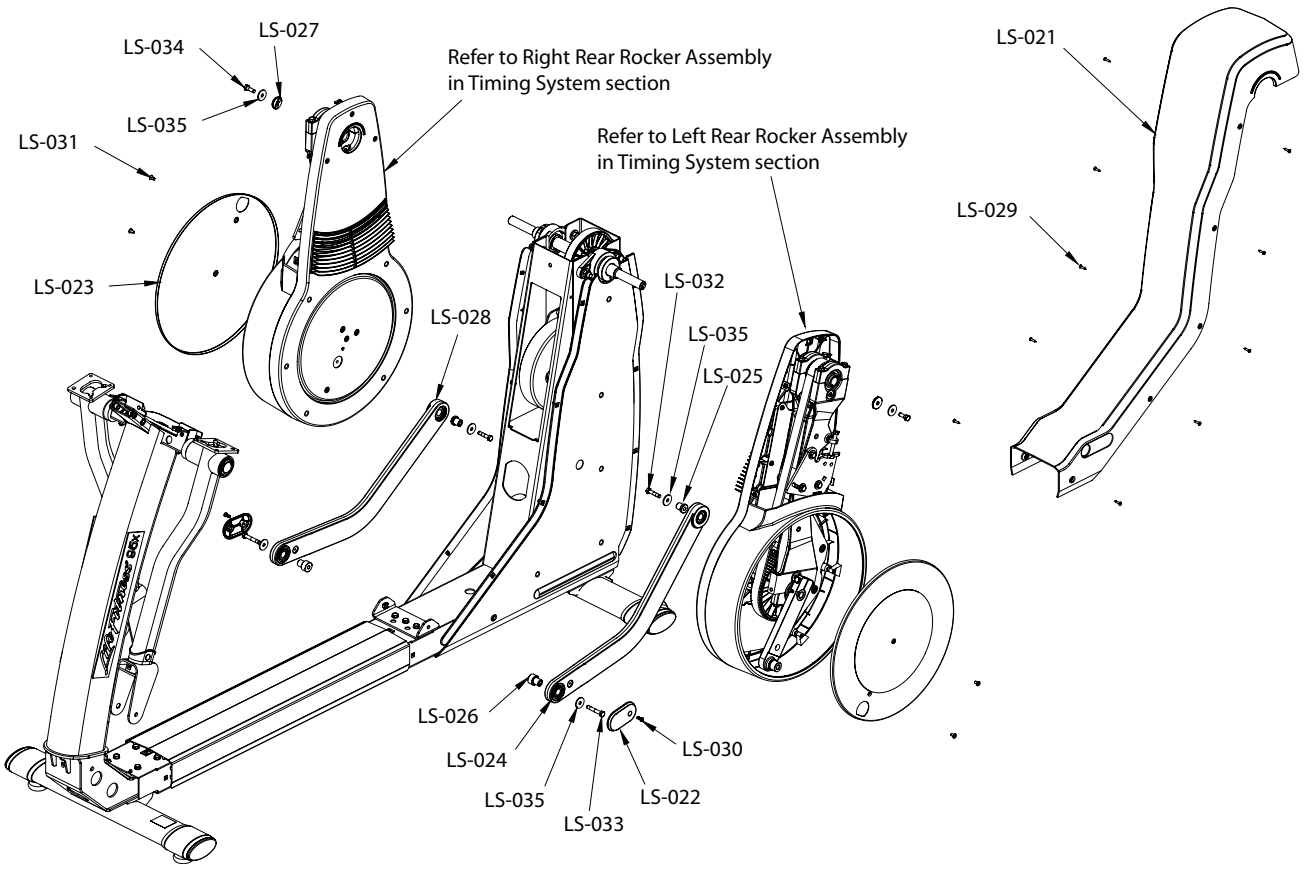

Parts List

Item	Alpha Code	Part Number	Description
LS-021	XAX	AK69-00083-0000	ASSY: REAR TOWER; TOP: SHADOW GRAY
	ASX, AXS, APX, ASW	AK69-00083-2400	ASSY: REAR TOWER; TOP: CHARCOAL GRAY
LS-022	XAX	0K69-01119-0000	COVER: LOW ROCKING LINK: SHADOW GRAY
	ASX, AXS, APX, ASW	0K69-01119-2400	COVER: LOW ROCKING LINK: CHARCOAL GRAY
LS-023	XAX	AK69-00096-0000	ASSY: CRANK COVER; OUTER W/DECAL: SHADOW GRAY/ARCTIC SILVER
	ASX, AXS, APX, ASW	AK69-00096-0101	ASSY: CRANK COVER; OUTER W/ DECAL: ARCTIC SILVER
	ASX, AXS	AK69-00096-2100	ASSY: CRANK COVER; OUTER W/ DECAL: PEARL WHITE
	ASX, AXS	AK69-00096-2200	ASSY: CRANK COVER; OUTER W/ DECAL: TITANIUM
	ASX, AXS	AK69-00096-2300	ASSY: CRANK COVER; OUTER W/ DECAL: METALLIC BLACK
LS-024	XAX	AK69-00113-0000	LOW ROCKING LINK ASSY: LEFT; W/ BRGS: SHADOW GRAY
	ASX, AXS, APX, ASW	AK69-00113-2400	LOW ROCKING LINK ASSY: LEFT; W/ BRGS: CHARCOAL GRAY
LS-025	XAX, ASX, AXS, APX, ASW	0K69-01178-0000	SPACER: FRAME ROCKER; REAR
LS-026	XAX, ASX, AXS, APX, ASW	0K69-01079-0000	SPACER: FRAME ROCKER; FRONT; PURCH.
LS-027	XAX, ASX, AXS, APX, ASW	0K69-01175-0001	WASHER: KEYED
LS-028	XAX	AK69-00112-0000	LOW ROCKING LINK ASSY: RIGHT; W/ BRGS: SHADOW GRAY
	ASX, AXS, APX, ASW	AK69-00112-2400	LOW ROCKING LINK ASSY: RIGHT; W/ BRGS: CHARCOAL GRAY
LS-029	XAX, ASX, AXS, APX ASW	0017-00101-1796	M4.2 X 0.7 6g6g X 19 DIN PHL PAN AB ST ZB
LS-030	XAX, ASX, AXS, APX ASW	0017-00101-1940	M5 X .8 X 14 PHL PAN MS ST ZN
LS-031	XAX, ASX, AXS, APX ASW	0017-00101-1988	M6 X 1 6G6G X 12 DIN SOC FLT CS ST ZB
LS-032	XAX, ASX, AXS, APX ASW	0017-00101-2023	M8X1.25-6G6GX38.0 DIN UNS HEX MS ST ZN
LS-033	XAX, ASX, AXS, APX ASW	0017-00101-2037	M8 X 1.25 6G6G X 50 HEX
LS-034	XAX, ASX, AXS, APX, ASW	0017-00101-1931	M8X1.25 6G6GX25MM DIN UNS HEX CS ST ZN
LS-035	XAX, ASX, AXS, APX ASW	0017-00104-0409	WSH 327-1125-090 FL-D ST BZ

Timing System

Right Rear Rocker Assembly

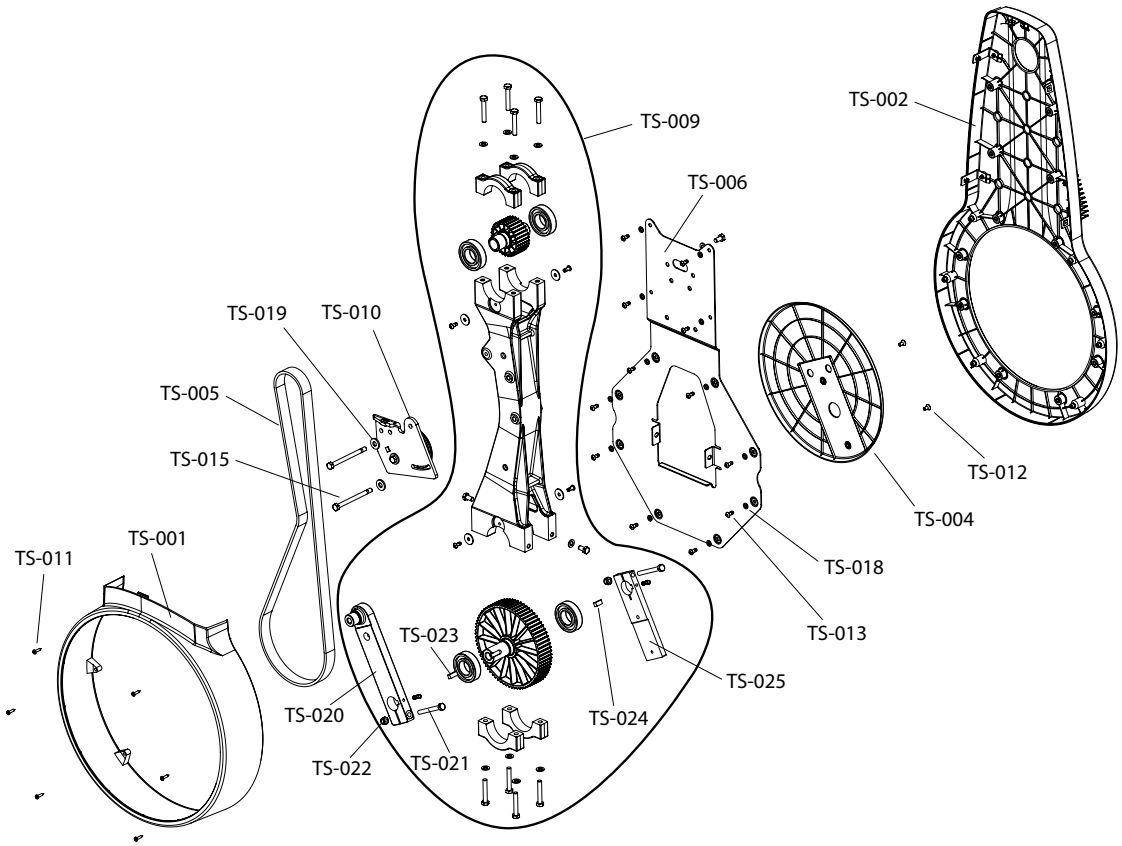

Parts List

Item	Alpha Code	Part Number	Description
TS-001	XAX	0K69-01109-0000	COVER: LOWER LINK: SHADOW GRAY
	ASX, AXS, APX, ASW	0K69-01109-2400	COVER: LOWER LINK: CHARCOAL GRAY
TS-002	XAX	AK69-00123-0000	SUB-ASSY: INNER LINK COVER; PURCH: SHADOW GRAY
	ASX, AXS, APX, ASW	AK69-00123-2400	SUB-ASSY: INNER LINK COVER; PURCH: CHARCOAL GRAY
TS-004	XAX	0K69-01232-0201	COVER: CRANK; INNER; PLASTIC: SHADOW GRAY
	ASX, AXS, APX, ASW	0K69-01232-2401	COVER: CRANK; INNER; PLASTIC: CHARCOAL GRAY
TS-005	XAX, ASX, AXS, APX, ASW	0K69-01041-0002	BELT: TIMING; REAR ROCKER; 25MM
TS-006	XAX, ASX, AXS, APX, ASW	AK69-00077-0000	ASSY: UPPER MTG BRKT; INNER LINK COVER
TS-009	XAX, ASX, AXS, APX, ASW	GK69-00002-0003	ROCKER CASTING W/ PULLEYS - RIGHT
TS-010	XAX, ASX, AXS, APX, ASW	AK69-00029-0001	ASSY: IDLER-ROLLER; RIGHT; W/ SPACER
TS-011	XAX, ASX, AXS, APX, ASW	0017-00101-1796	M4.2 X 0.7 6g6g X 19 DIN PHL PAN AB ST ZB
TS-012	XAX, ASX, AXS, APX, ASW	0017-00101-1988	M6 X 1 6G6G X 12 DIN SOC FLT CS ST ZB
TS-013	XAX, ASX, AXS, APX, ASW	0017-00101-2014	M6X1-6G6HX14-DIN HEX BUT L ST ZB
TS-015	XAX, ASX, AXS, APX, ASW	0017-00101-1951	M8X1.25-6G6G X 100 DIN UNS HEX CS ST ZN
TS-018	XAX, ASX, AXS, APX, ASW	0017-00104-0488	WSH: M6.5 X 11.5 X 1.75 DIN SL ST BZ
TS-019	XAX, ASX, AXS, APX, ASW	0017-00104-0334	WSH 390-.880-120 FL-D ST BZ
TS-020	XAX, ASX, AXS, APX, ASW	0K69-01227-0000	CRANK: OUTER; CASTING
TS-021	XAX, ASX, AXS, APX, ASW	0017-00101-1905	M8 X1.25-6G6GX70 DIN UNS HEX CS ST ZN
TS-022	XAX, ASX, AXS, APX, ASW	0017-00103-0333	VMI NUT M 8X1.25-6H6H DIN L LOCKNUT ST ZN B
TS-023	XAX, ASX, AXS, APX, ASW	0K69-01023-0000	KEYWAY: 8 X 7 X 20
TS-024	XAX, ASX, AXS, APX, ASW	0K69-01024-0000	KEYWAY: 8 X 7 X 16
TS-025	XAX, ASX, AXS, APX, ASW	0K69-01038-0000	CRANK: INNER; PURCH

Left Rear Rocker Assembly

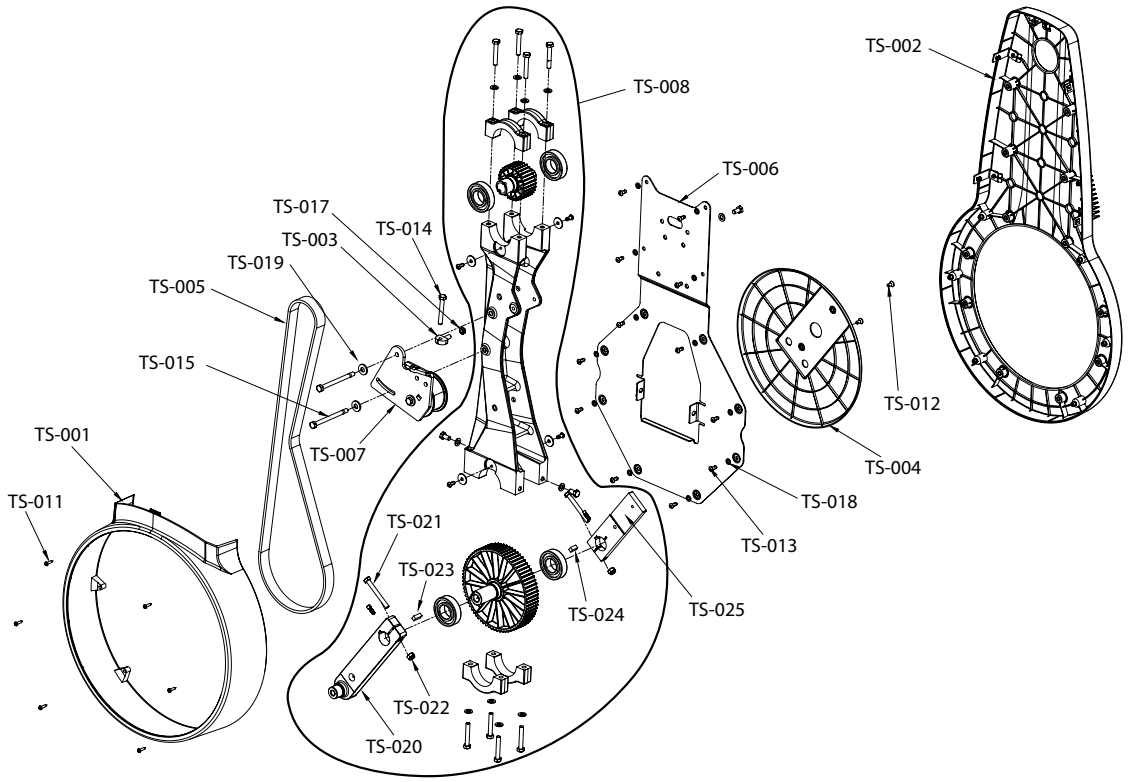

Parts List

Item	Alpha Code	Part Number	Description
TS-001	XAX	0K69-01109-0000	COVER: LOWER LINK: SHADOW GRAY
	ASX, AXS, APX, ASW	0K69-01109-2400	COVER: LOWER LINK: CHARCOAL GRAY
TS-002	XAX	AK69-00123-0000	SUB-ASSY: INNER LINK COVER; PURCH: SHADOW GRAY
	ASX, AXS, APX, ASW	AK69-00123-2400	SUB-ASSY: INNER LINK COVER; PURCH: CHARCOAL GRAY
TS-003	XAX, ASX, AXS, APX, ASW	0K69-01174-0000	BRKT: TENSION; PIVOT
TS-004	XAX	0K69-01232-0201	COVER: CRANK; INNER; PLASTIC: SHADOW GRAY
	ASX, AXS, APX, ASW	0K69-01232-2401	COVER: CRANK; INNER; PLASTIC: CHARCOAL GRAY
TS-005	XAX, ASX, AXS, APX, ASW	0K69-01041-0002	BELT: TIMING; REAR ROCKER; 25MM
TS-006	XAX, ASX, AXS, APX, ASW	AK69-00077-0000	ASSY: UPPER MTG BRKT; INNER LINK COVER
TS-007	XAX, ASX, AXS, APX, ASW	AK69-00029-0000	ASSY: IDLER-ROLLER; LEFT; W/ SPACER
TS-008	XAX, ASX, AXS, APX, ASW	GK69-00002-0004	ROCKER CASTING W/ PULLEYS - LEFT
TS-011	XAX, ASX, AXS, APX, ASW	0017-00101-1796	M4.2 X 0.7 6g6g X 19 DIN PHL PAN AB ST ZB
TS-012	XAX, ASX, AXS, APX, ASW	0017-00101-1988	M6 X 1 6G6G X 12 DIN SOC FLT CS ST ZB
TS-013	XAX, ASX, AXS, APX, ASW	0017-00101-2014	M6X1-6G6HX14-DIN HEX BUT L ST ZB
TS-014	XAX, ASX, AXS, APX, ASW	0017-00101-2002	M8.0X1.25-6G6GX60 DIN UNS HEX CS G5 CD
TS-015	XAX, ASX, AXS, APX, ASW	0017-00101-1951	M8X1.25-6G6G X 100 DIN UNS HEX CS ST ZN
TS-017	XAX, ASX, AXS, APX, ASW	0017-00103-0338	NUT: M8 X 1.25 - 6H6H DIN L THIN ST ZB
TS-018	XAX, ASX, AXS, APX, ASW	0017-00104-0488	WSH: M6.5 X 11.5 X 1.75 DIN SL ST BZ
TS-019	XAX, ASX, AXS, APX, ASW	0017-00104-0334	WSH 390-.880-120 FL-D ST BZ
TS-020	XAX, ASX, AXS, APX, ASW	0K69-01227-0000	CRANK: OUTER; CASTING
TS-021	XAX, ASX, AXS, APX, ASW	0017-00101-1905	M8 X1.25-6G6GX70 DIN UNS HEX CS ST ZN
TS-022	XAX, ASX, AXS, APX, ASW	0017-00103-0333	VMI NUT M 8X1.25-6H6H DIN L LOCKNUT ST ZN B
TS-023	XAX, ASX, AXS, APX, ASW	0K69-01023-0000	KEYWAY: 8 X 7 X 20
TS-024	XAX, ASX, AXS, APX, ASW	0K69-01024-0000	KEYWAY: 8 X 7 X 16
TS-025	XAX, ASX, AXS, APX, ASW	0K69-01038-0000	CRANK: INNER; PURCH

Electrical

95X-ALLXX-06(XAX), 95XS-ALLXX-XX07 (ASX), PCSXS-ALLXX-XX07(AXS)

Discover Base Cables

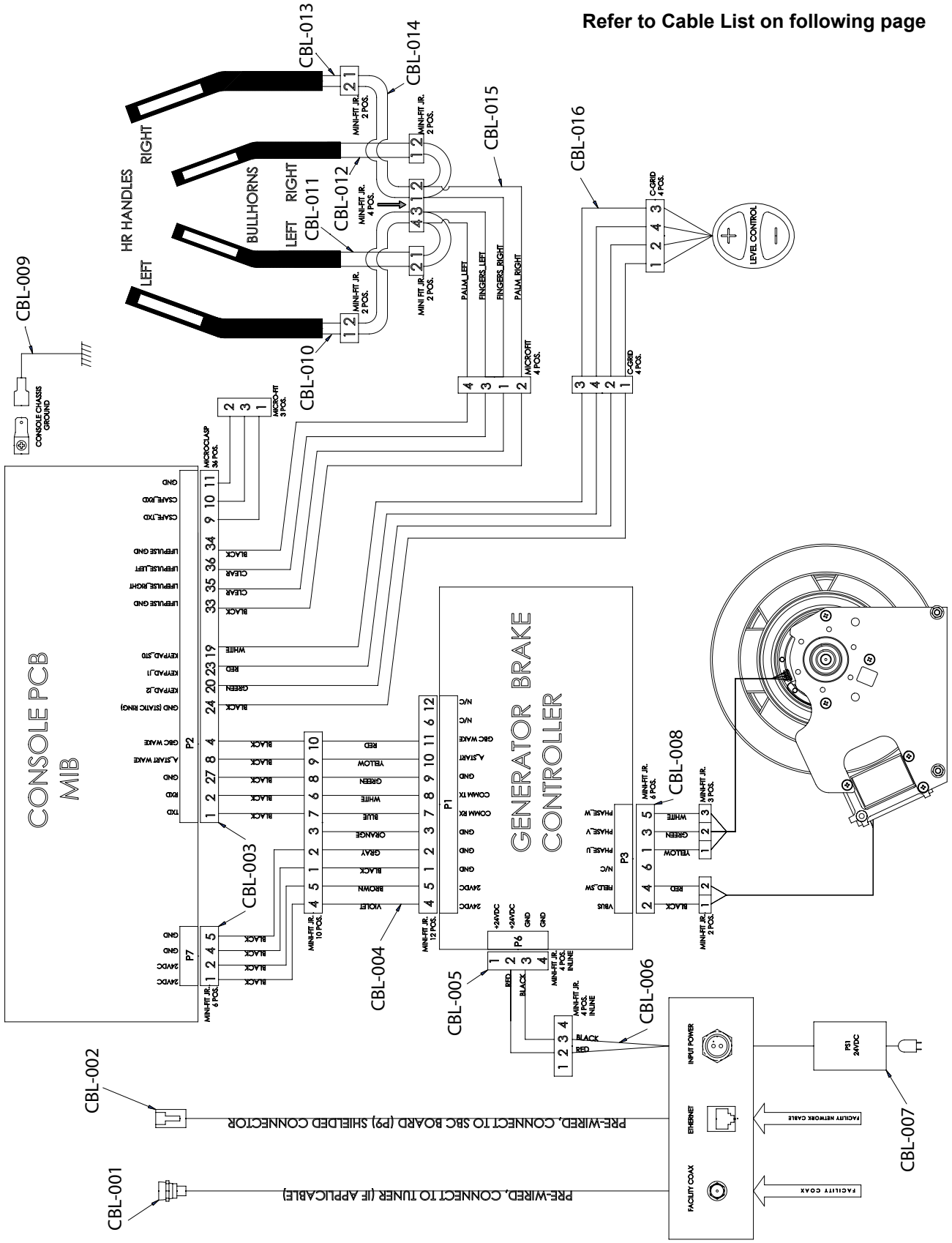

Discover Base Cable List
95X-ALLXX-06(XAX), 95XS-ALLXX-XX07 (ASX), PCSXS-ALLXX-XX07(AXS)

Item	Alpha Code	Part Number	Description
CBL-001	XAX, ASX, AXS	AK65-00062-0000	COAX ASSY: RG6; BASE
CBL-002	XAX, ASX, AXS	AK70-00092-0000	CABLE ASSEMBLY CAT-5E
CBL-003	XAX, ASX, AXS	AK92-00048-0001	EXTENSION TO CONSOLE CABLE
CBL-004	XAX, ASX, AXS	AK92-00033-0000	PCB TO CONSOLE CABLE
CBL-005	XAX, ASX, AXS	AK92-00062-0000	EXTERNAL POWER WITH GROUND EXTENSION CABLE ASSEMBLY
CBL-006	XAX, ASX, AXS	AK92-00067-0000	CABLE ASSEMBLY: EXTERNAL POWER; CT
CBL-007	XAX, ASX, AXS	0017-00003-1071	SUPPLY: POWER; 24V DC 5.0 AMP
CBL-008	XAX, ASX, AXS	AK69-00104-0000	CBL ASSY: GENERATOR/BRAKE TO PCB
CBL-009	XAX, ASX, AXS	AK65-00103-0001	CBL ASSY: GROUND ESD
CBL-010	XAX, ASX, AXS	AK61-00051-0000	CBL-ASSY: USER-ARM S/C-C
CBL-011	XAX, ASX, AXS	AK61-00051-0002	CBL-ASSY: USER-ARM S/C-C
CBL-012	XAX, ASX, AXS	AK61-00051-0002	CBL-ASSY: USER-ARM S/C-C
CBL-013	XAX, ASX, AXS	AK61-00051-0000	CBL-ASSY: USER-ARM S/C-C
CBL-014	XAX, ASX, AXS	AK69-00110-0000	CBL ASSY: LIFEPULSE; FLEX
CBL-015	XAX, ASX, AXS	AK69-00109-0000	CBL ASSY: LIFEPULSE Y
CBL-016	XAX, ASX, AXS	AK69-00108-0000	CBL ASSY: KEYPAD

Achieve Base Cables

PCSXS-ALLXX-0115(APX)
95XS-ALLXX-0115 (ASW)

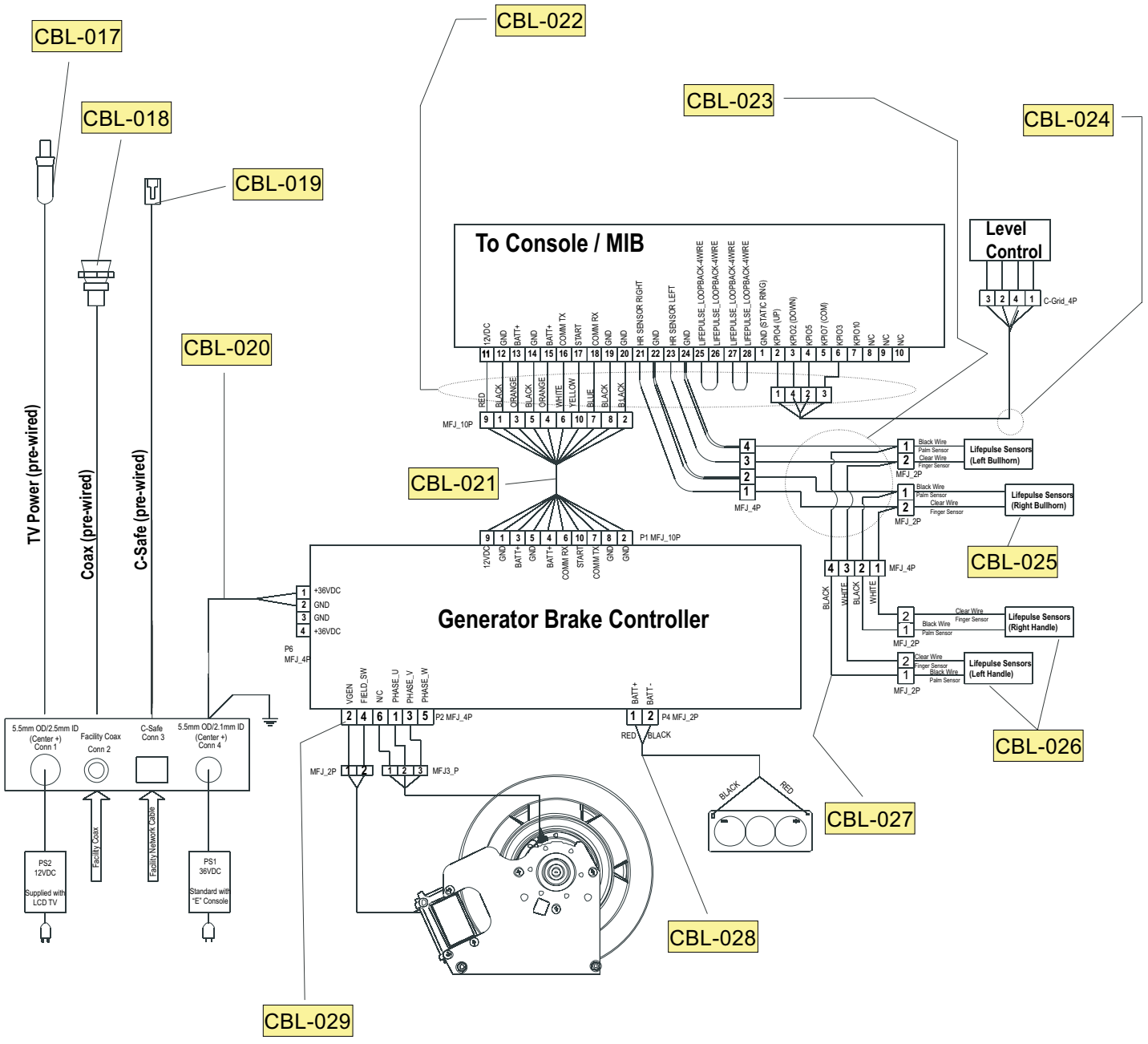

Achieve Base Cable List

PCSXS-ALLXX-0115 (APX), 95XS-ALLXX-0115 (ASW)

Item	Alpha Code	Part Number	Description
CBL-017	APX, ASW	AK32-00160-0000	PWR- EXT CABLE w/ FERRITE
CBL-018	APX, ASW	AK65-00062-0000	RG6 COAX CABLE
CBL-019	APX, ASW	AK70-00092-0000	CAT-5E ETHERNET CABLE
CBL-020	APX, ASW	AK69-00107-0001	PWR-EXT CABLE w/ GND
CBL-021	APX, ASW	AK69-00105-0000	GBS to CONSOLE CABLE
CBL-022	APX, ASW	AK69-00103-0000	HANDLEBAR / CONSOLE CABLE
CBL-023	APX, ASW	AK69-00109-0000	LIFEPULSE "Y" CABLE
CBL-024	APX, ASW	AK69-00108-0000	BUTTON ASSEMBLY, CABLE
CBL-025	APX, ASW	AK61-00051-0000	BULLHORN HR CABLES
CBL-026	APX, ASW	AK61-00051-0002	USER ARM HR CABLES
CBL-027	APX, ASW	AK69-00110-0000	LIFEPULSE FLEX CABLE
CBL-028	APX, ASW	AK69-00106-0000	BATTERY CABLE
CBL-029	APX, ASW	AK69-00104-0000	GENERATOR / BRAKE to GBC